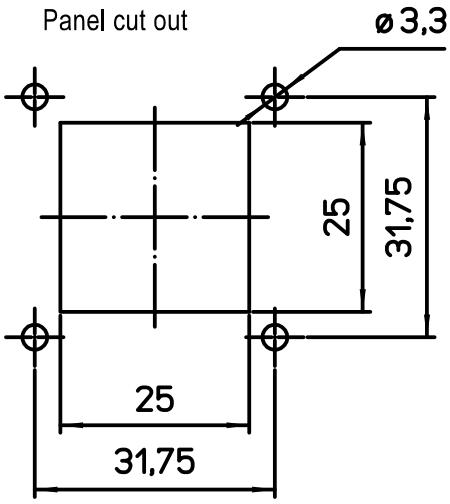

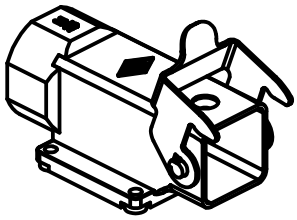

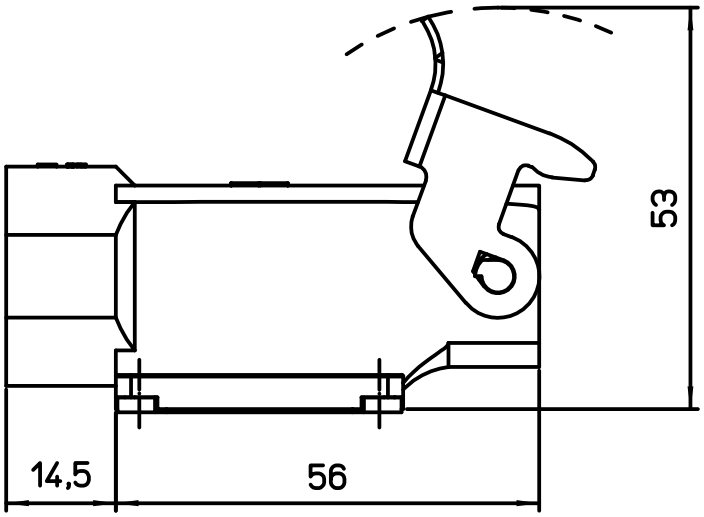

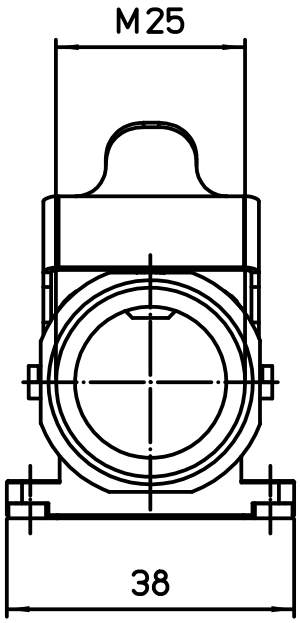

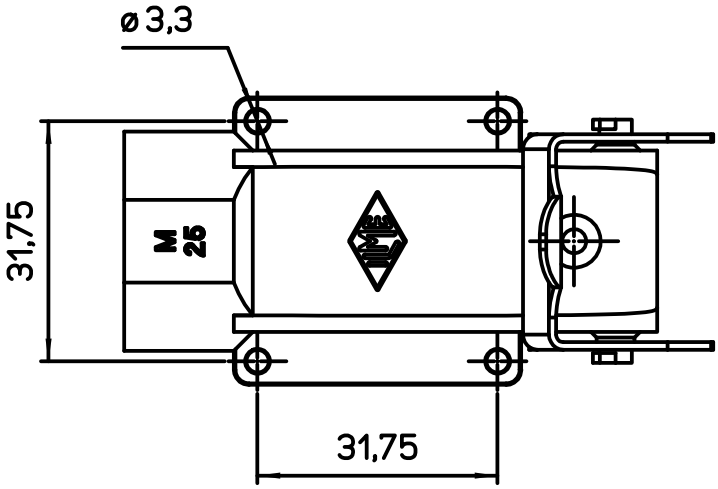

All rights reserved
Diritti riservati

dimensions in mm	MKAXX IAP25	Scale	
Date 17/07/17	Metal angled bulkhead housing, stainless steel lever, M25	1:1	
Sign. Radice			