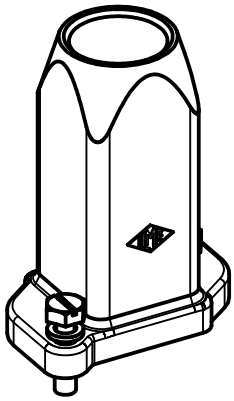

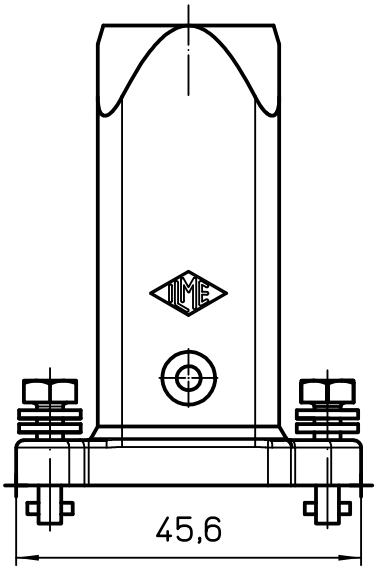

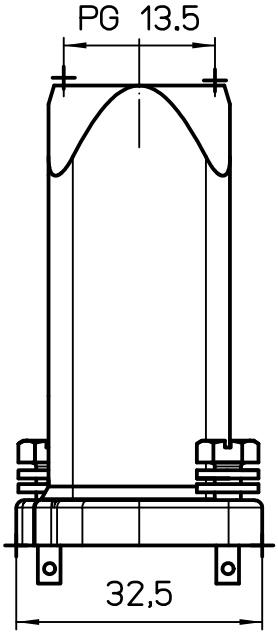

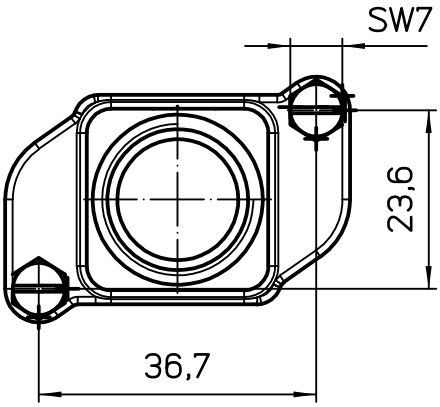

Diritti riservati All rights reserved

dimensions in mm	CGK V13 B	Scale
Date 08/04/14	Metal hood top entry PG13.5, IP68, bayonet type	1:1
Sign. Radice		