Diritti riservati All rights reserved

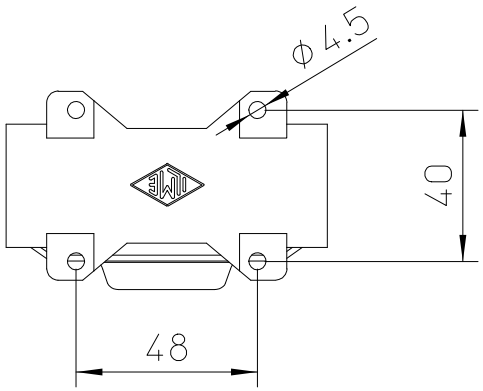

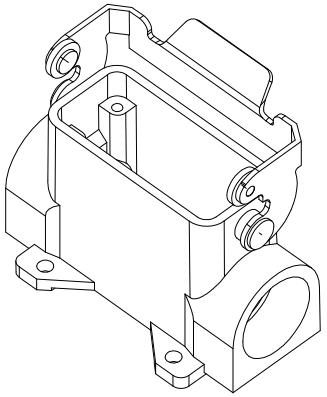

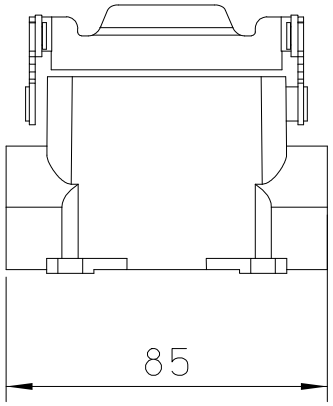

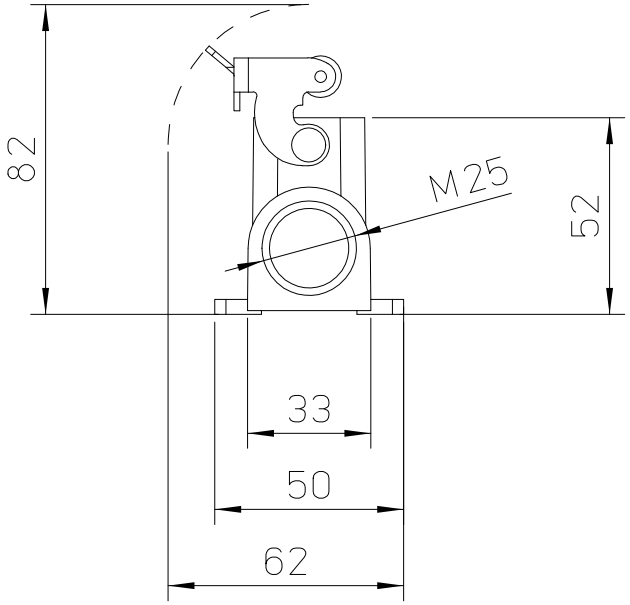

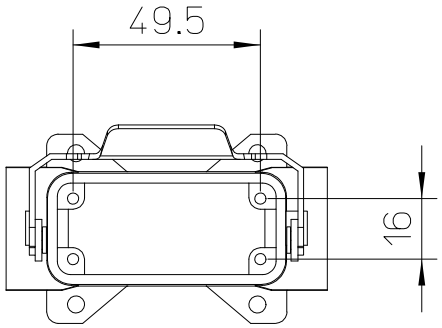

dimensions in mm	MZ7P 15 L225	Scale
Date 28/03/17	Surface mounting housing, 2xM25, 1 lever	1:2
Sign. C. Mainini		