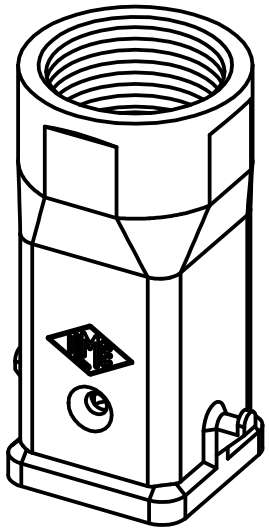

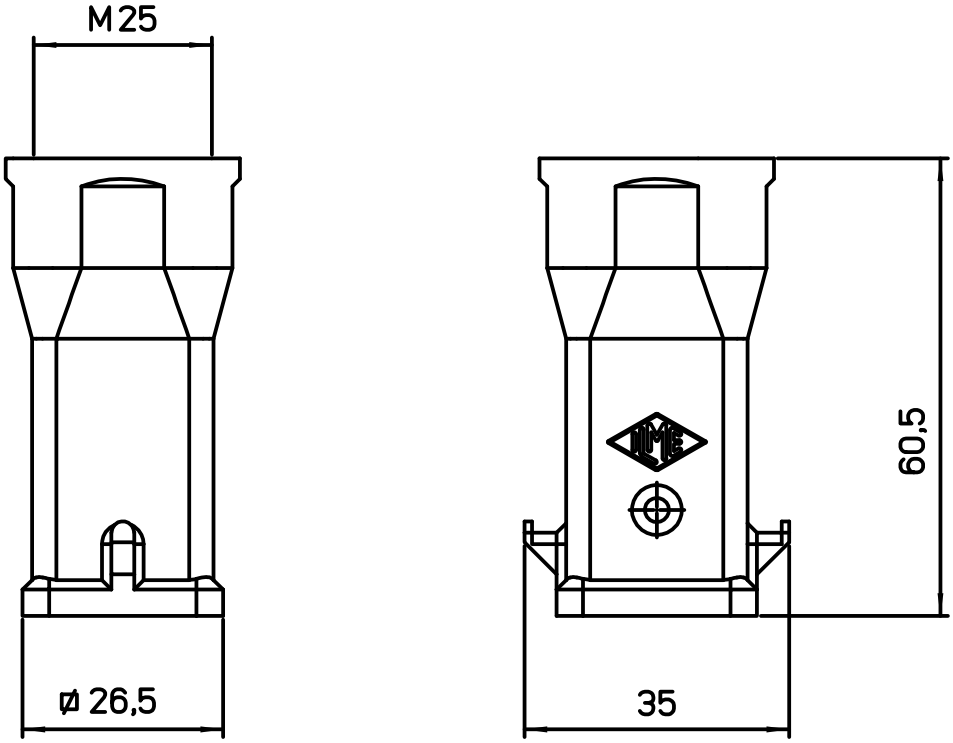

Diritti riservati All rights reserved

dimensions in mm	
Date	10/07/18
Sign.	D.Cominelli

MK V25

Insulating hood top entry M25

Scale 1:1