Diritti riservati | All rights reserved

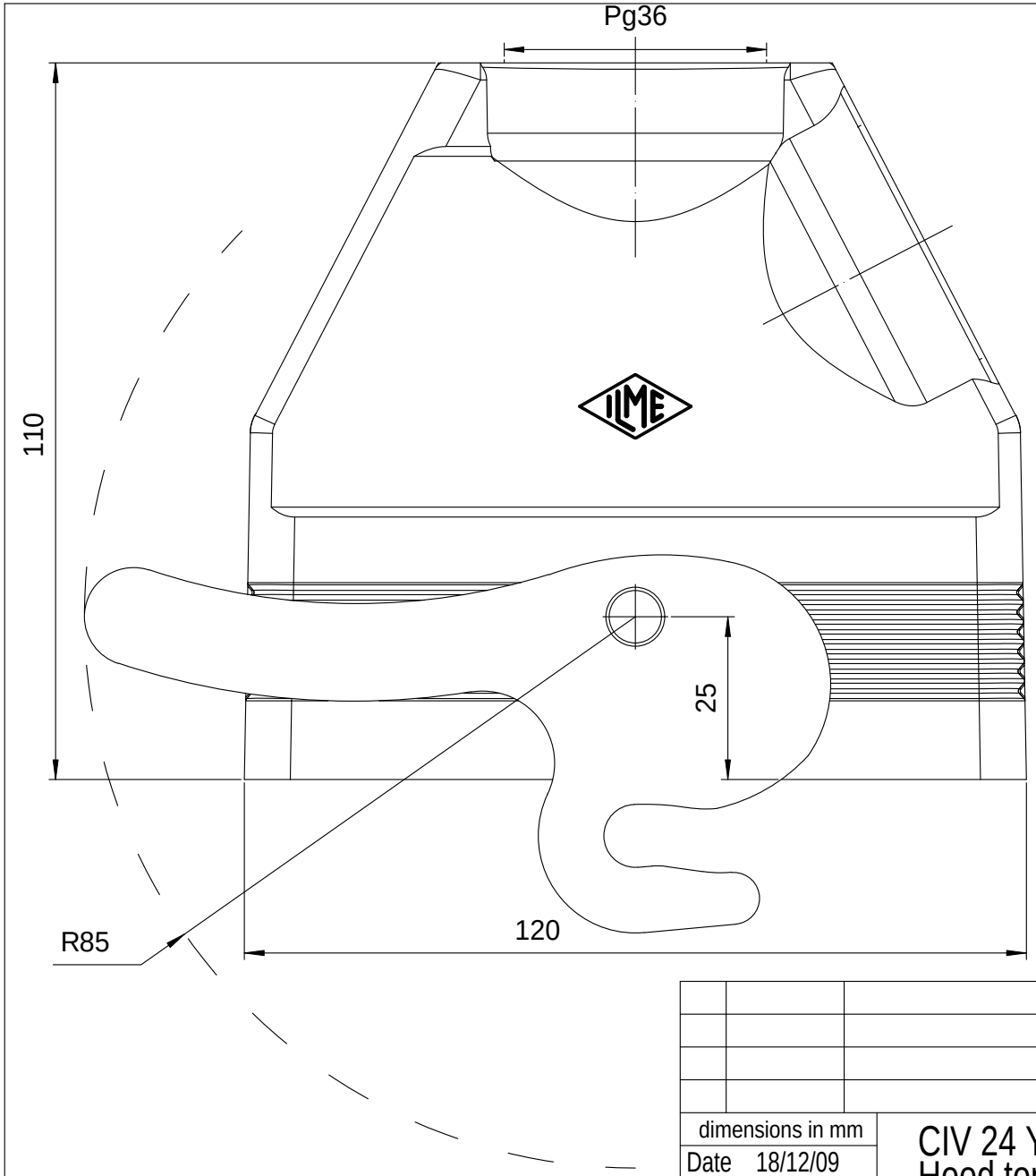


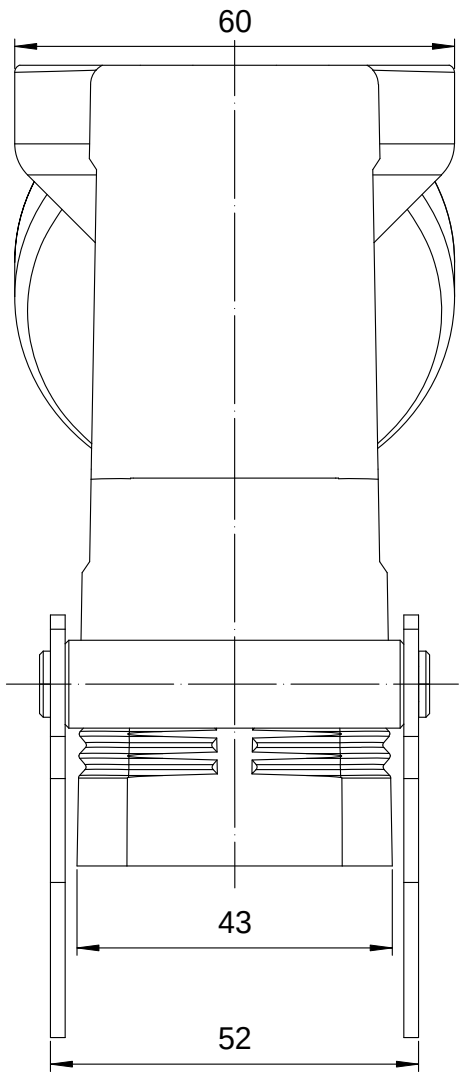


| | | |
|---|---|---|
| dimensions in mm | CIV 24 YX36<br>Hood top entry Pg36 with lever | Scale<br>1:1 |
| Date 18/12/09 | | |
| Sign. G.Merafina | | |