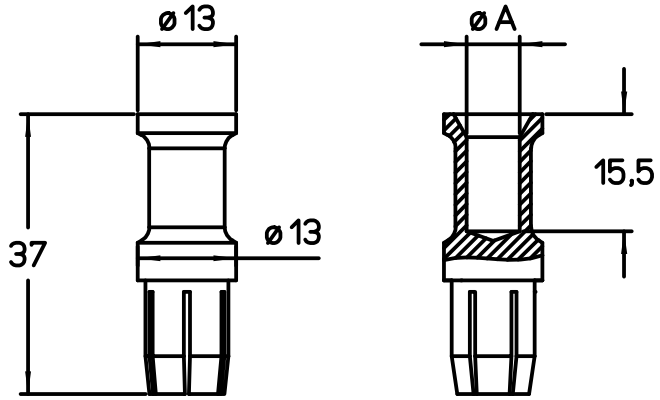

PART NUMBERS SILVER PLATED	øA mm	WIRE GAUGE mm 2	AWG	STRIPPING LENGTH mm
CGFA 10	4,3	10	7-6	15
CGFA 16	5,5	16	6-5	15
CGFA 25	7,0	25	4-3	15
CGFA 35	8,2	35	2	15

Diritti riservati All rights reserved

dimensions in mm	CGFA	Scale	ILME
Date 02/07/15	female crimp contact 100A	1:1	
Sign. M.Pezzimenti			