Diritti riservati | All rights reserved

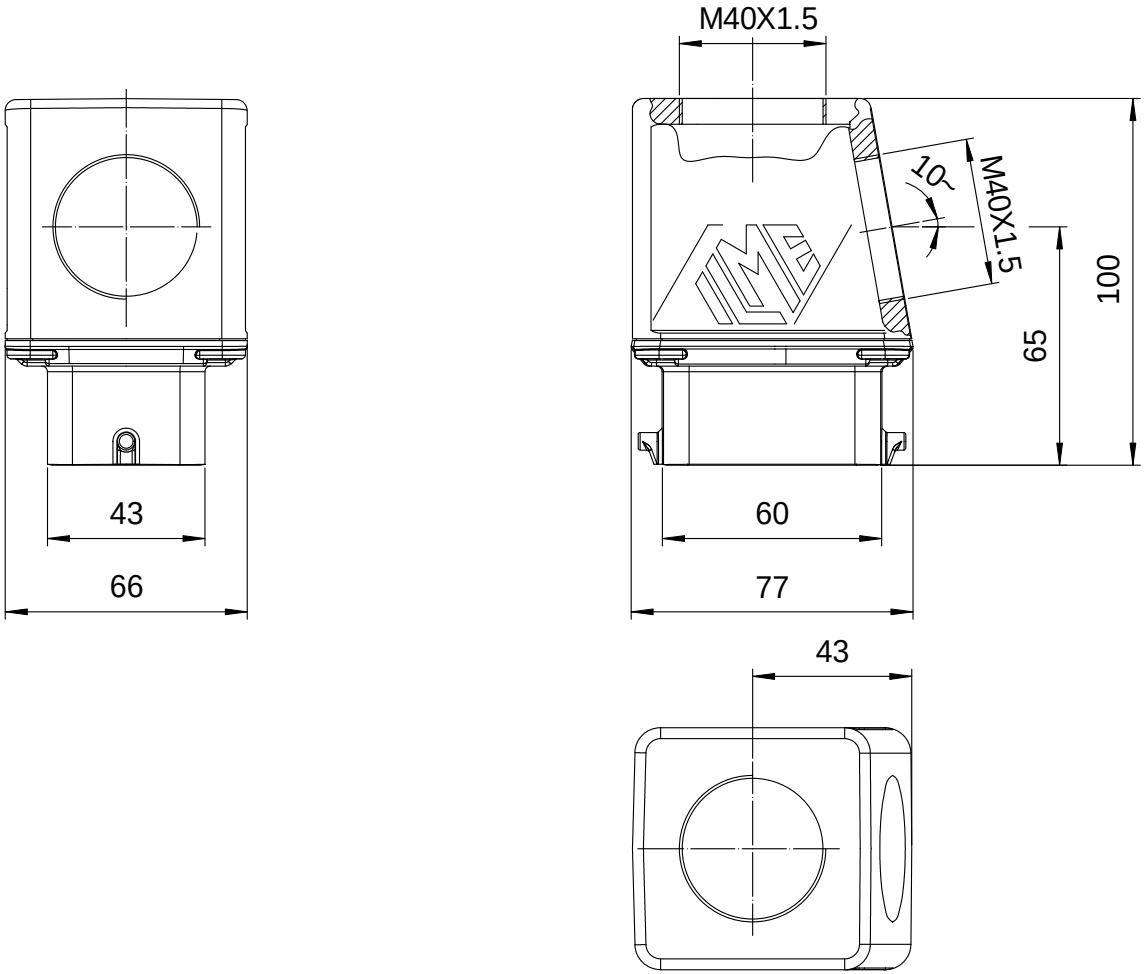

dimensions in mm

Date20/06/14

Sign Radice

MBVO 06 L240

Hood, top and side entry M40

Scale 1:2