Diritti riservati All rights reserved

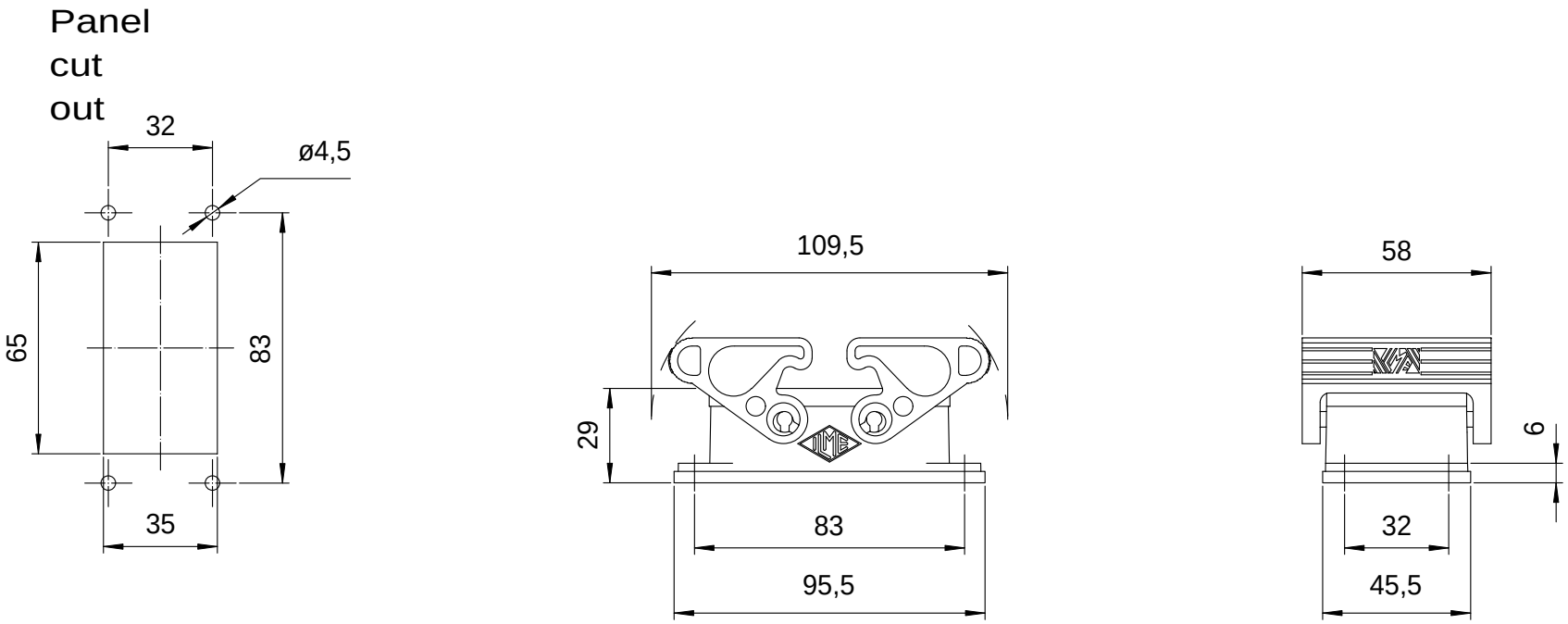

dimensions in mm	CHIN 10	Scale	
Date 23/06/14	Bulkhead mounting housing, 2 levers - LS TYPE	1:2	
Sign Radice			